Planning and Optimization

D4. Delete Relaxation: AND/OR Graphs

Malte Helmert and Gabriele Röger

Universität Basel

October 21, 2026

D4.1 AND/OR Graphs

D4.2 Forced Nodes

D4.3 Most/Least Conservative Valuations

D4.4 Summary

Content of the Course

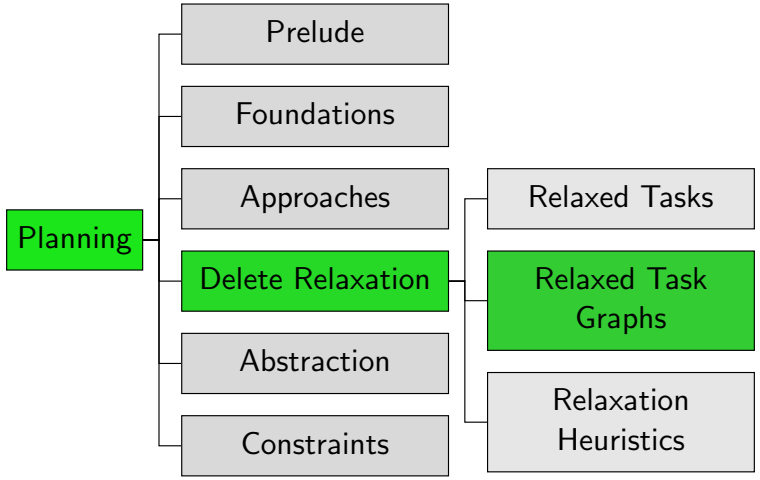

D4.1 AND/OR Graphs

Using Relaxations in Practice

How can we use relaxations for heuristic planning in practice?

Different possibilities:

- Implement an optimal planner for relaxed planning tasks and use its solution costs as estimates, even though optimal relaxed planning is NP-hard.
  $\rightsquigarrow$ h^+ heuristic
- Do not actually solve the relaxed planning task, but compute an approximation of its solution cost.
  $\rightsquigarrow$ $h^{\max}$ heuristic, h^{add} heuristic, $h^{\text{LM-cut}}$ heuristic
- Compute a solution for relaxed planning tasks which is not necessarily optimal, but "reasonable".
  $\rightsquigarrow$ h^{FF} heuristic

AND/OR Graphs: Motivation

- Most relaxation heuristics we will consider can be understood in terms of computations on graphical structures called AND/OR graphs.
- We now introduce AND/OR graphs and study some of their major properties.
- In the next chapter, we will relate AND/OR graphs to relaxed planning tasks.

AND/OR Graph Example

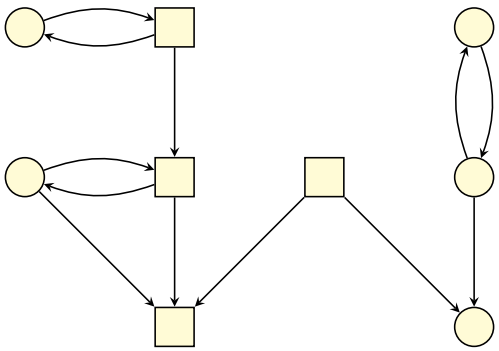

AND/OR Graphs

Definition (AND/OR Graph)

An AND/OR graph $\langle N, A, type\rangle$ is a directed graph $\langle N, A\rangle$ with a node label function $type : N \to \{\wedge, \vee\}$ partitioning nodes into

- AND nodes ($type(v) = \wedge$) and
- OR nodes ($type(v) = \vee$).

We write $succ(n)$ for the successors of node $n \in N$, i.e., $succ(n) = \{n' \in N \mid \langle n, n'\rangle \in A\}$.

Note: We draw AND nodes as squares and OR nodes as circles.

AND/OR Graph Valuations

Definition (Consistent Valuations of AND/OR Graphs)

Let G be an AND/OR graph with nodes N.

A valuation or truth assignment of G is an interpretation $\alpha : N \to \{\mathbf{T}, \mathbf{F}\}$, treating the nodes as propositional variables.

We say that α is consistent if

- for all AND nodes $n \in N$: $\alpha \models n$ iff $\alpha \models \bigwedge_{n' \in succ(n)} n'$.
- for all OR nodes $n \in N$: $\alpha \models n$ iff $\alpha \models \bigvee_{n' \in succ(n)} n'$.

Note that $\bigwedge_{n' \in \emptyset} n' = \top$ and $\bigvee_{n' \in \emptyset} n' = \bot$.

Example: A Consistent Valuation

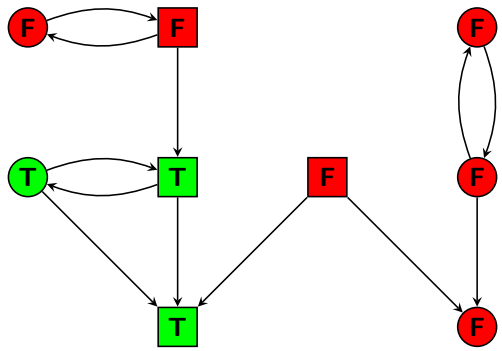

Example: Another Consistent Valuation

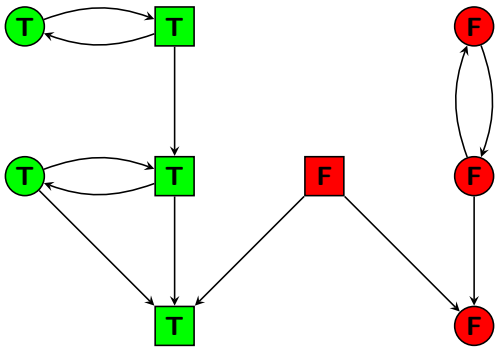

Example: An Inconsistent Valuation

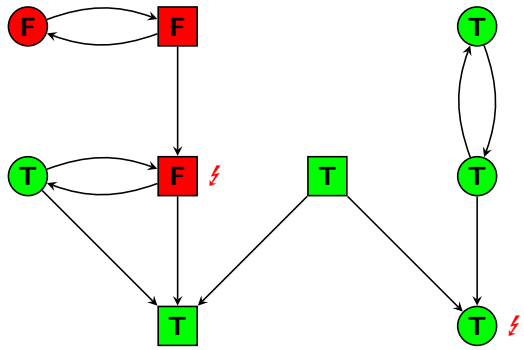

How Do We Find Consistent Valuations?

If we want to use valuations of AND/OR graphs algorithmically, a number of questions arise:

- Do consistent valuations exist for every AND/OR graph?
- Are they unique?
- If not, how are different consistent valuations related?
- Can consistent valuations be computed efficiently?

Our example shows that the answer to the second question is "no". In the rest of this chapter, we address the remaining questions.

D4.2 Forced Nodes

Forced Nodes

Definition (Forced True/False Nodes)

Let G be an AND/OR graph.

A node n of G is called forced true if $\alpha(n) = \mathbf{T}$ for all consistent valuations α of G.

A node n of G is called forced false if $\alpha(n) = \mathbf{F}$ for all consistent valuations α of G.

How can we efficiently determine that nodes are forced true/false?

$\rightsquigarrow$ We begin by looking at some simple rules.

Rules for Forced True Nodes

Proposition (Rules for Forced True Nodes)

Let n be a node in an AND/OR graph.

Rule $\mathbf{T}$-($\wedge$): *If n is an AND node and all of its successors are forced true, then n is forced true.*

Rule $\mathbf{T}$-($\vee$): *If n is an OR node and at least one of its successors is forced true, then n is forced true.*

Rules for Forced False Nodes

Proposition (Rules for Forced False Nodes)

Let n be a node in an AND/OR graph.

Rule **F**-($\wedge$)*: If n is an AND node and at least one of its successors is forced false, then n is forced false.*

Rule **F**-($\vee$)*: If n is an OR node and all of its successors are forced false, then n is forced false.*

Example: Applying the Rules for Forced Nodes

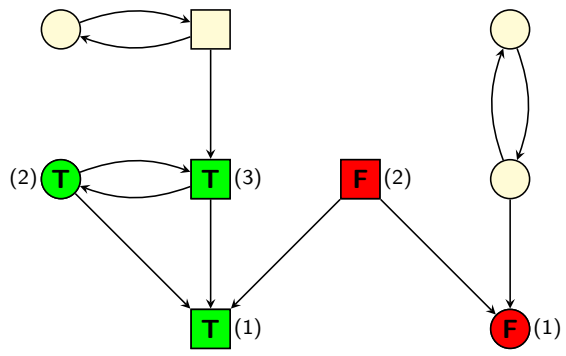

Completeness of Rules for Forced Nodes

Theorem

If n is a node in an AND/OR graph that is forced true, then this can be derived by a sequence of applications of Rule **T**-($\wedge$) *and Rule* **T**-($\vee$).

Theorem

If n is a node in an AND/OR graph that is forced false, then this can be derived by a sequence of applications of Rule **F**-($\wedge$) *and Rule* **F**-($\vee$).

We prove the result for forced true nodes.
The result for forced false nodes can be proved analogously.

Completeness of Rules for Forced Nodes: Proof (1)

Proof.

- Let α be a valuation where $\alpha(n) = \mathbf{T}$ iff there exists a sequence ρ_n of applications of Rules **T**-($\wedge$) and Rule **T**-($\vee$) that derives that n is forced true.
- Because the rules are monotonic, there exists a sequence ρ of rule applications that derives that n is forced true for all $n \in on(\alpha)$. (Just concatenate all ρ_n to form ρ.)
- By the correctness of the rules, we know that all nodes reached by ρ are forced true. It remains to show that none of the nodes not reached by ρ is forced true.
- We prove this by showing that α is consistent, and hence no nodes with $\alpha(n) = \mathbf{F}$ can be forced true.

...

Completeness of Rules for Forced Nodes: Proof (2)

Proof (continued).

Case 1: nodes n with $\alpha(n) = \mathbf{T}$

- In this case, ρ must have reached n in one of the derivation steps. Consider this derivation step.
- If n is an AND node, ρ must have reached all successors of n in previous steps, and hence $\alpha(n') = \mathbf{T}$ for all successors n'.
- If n is an OR node, ρ must have reached at least one successor of n in a previous step, and hence $\alpha(n') = \mathbf{T}$ for at least one successor n'.
- In both cases, α is consistent for node n.

...

Completeness of Rules for Forced Nodes: Proof (3)

Proof (continued).

Case 2: nodes n with $\alpha(n) = \mathbf{F}$

- In this case, by definition of α no sequence of derivation steps reaches n. In particular, ρ does not reach n.
- If n is an AND node, there must exist some $n' \in succ(n)$ which ρ does not reach. Otherwise, ρ could be extended using Rule $\mathbf{T}$-($\wedge$) to reach n. Hence, $\alpha(n') = \mathbf{F}$ for some $n' \in succ(n)$.
- If n is an OR node, there cannot exist any $n' \in succ(n)$ which ρ reaches. Otherwise, ρ could be extended using Rule $\mathbf{T}$-($\vee$) to reach n. Hence, $\alpha(n') = \mathbf{F}$ for all $n' \in succ(n)$.
- In both cases, α is consistent for node n.

□

Remarks on Forced Nodes

Notes:

- The theorem shows that we can compute all forced nodes by applying the rules repeatedly until a fixed point is reached.
- In particular, this also shows that the order of rule application does not matter: we always end up with the same result.
- In an efficient implementation, the sets of forced nodes can be computed in linear time in the size of the AND/OR graph.
- The proof of the theorem also shows that every AND/OR graph has a consistent valuation, as we explicitly construct one in the proof.

D4.3 Most/Least Conservative Valuations

Most and Least Conservative Valuation

Definition (Most and Least Conservative Valuation)

Let G be an AND/OR graph with nodes N.

The most conservative valuation $\alpha^G_{\text{mcv}} : N \to \{\mathbf{T}, \mathbf{F}\}$ and the least conservative valuation $\alpha^G_{\text{lcv}} : N \to \{\mathbf{T}, \mathbf{F}\}$ of G are defined as:

$$\alpha^G_{\text{mcv}}(n) = \begin{cases} \mathbf{T} & \text{if } n \text{ is forced true} \\ \mathbf{F} & \text{otherwise} \end{cases}$$

$$\alpha^G_{\text{lcv}}(n) = \begin{cases} \mathbf{F} & \text{if } n \text{ is forced false} \\ \mathbf{T} & \text{otherwise} \end{cases}$$

Note: α^G_{mcv} is the valuation constructed in the previous proof.

Properties of Most/Least Conservative Valuations

Theorem (Properties of Most/Least Conservative Valuations)

Let G be an AND/OR graph. Then:

1. *α^G_{mcv} is consistent.*
2. *α^G_{lcv} is consistent.*
3. *For all consistent valuations α of G, $on(\alpha^G_{\text{mcv}}) \subseteq on(\alpha) \subseteq on(\alpha^G_{\text{lcv}})$.*

Properties of MCV/LCV: Proof

Proof.

Part 1. was shown in the preceding proof. We showed that the valuation α considered in this proof is consistent and satisfies $\alpha(n) = \mathbf{T}$ iff n is forced true, which implies $\alpha = \alpha^G_{\text{mcv}}$.

The proof of Part 2. is analogous, using the rules for forced false nodes instead of forced true nodes.

Part 3 follows directly from the definitions of forced nodes, α^G_{mcv} and α^G_{lcv}. □

Properties of MCV/LCV: Consequences

This theorem answers our remaining questions about the existence, uniqueness, structure and computation of consistent valuations:

- Consistent valuations always exist and can be efficiently computed.
- All consistent valuations lie between the most and least conservative one.
- There is a unique consistent valuation iff $\alpha^G_{\text{mcv}} = \alpha^G_{\text{lcv}}$, or equivalently iff each node is forced true or forced false.

D4.4 Summary

Summary

- AND/OR graphs are directed graphs with AND nodes and OR nodes.
- We can assign truth values to AND/OR graph nodes.
- Such valuations are called consistent if they match the intuitive meaning of "AND" and "OR".
- Consistent valuations always exist.
- Consistent valuations can be computed efficiently.
- All consistent valuations fall between two extremes:
  - the most conservative valuation, where only nodes that are forced to be true are true
  - the least conservative valuation, where all nodes that are not forced to be false are true