Foundations of Artificial Intelligence

F6. Automated Planning: Abstraction Heuristics

Malte Helmert

University of Basel

May 7, 2025

Automated Planning: Overview

Chapter overview: automated planning

- F1. Introduction
- F2. Planning Formalisms
- F3. Delete Relaxation
- F4. Delete Relaxation Heuristics
- F5. Abstraction
- F6. Abstraction Heuristics

F6.1 Abstraction Heuristics

Abstraction Heuristic

Given an abstraction function α for a state space $\mathcal{S}$, use abstract solution cost (solution cost of $\alpha(s)$ in $\mathcal{S}^\alpha$) as heuristic for concrete solution cost (solution cost of s in $\mathcal{S}$).

Definition (abstraction heuristic)
The abstraction heuristic for abstraction α maps each state s to its abstract solution cost

$$h^\alpha(s) = h^*_{\mathcal{S}^\alpha}(\alpha(s)),$$

where $h^*_{\mathcal{S}^\alpha}$ is the perfect heuristic in $\mathcal{S}^\alpha$.

German: abstrakte/konkrete Zielabstände, Abstraktionsheuristik

Abstraction: Example

concrete state space

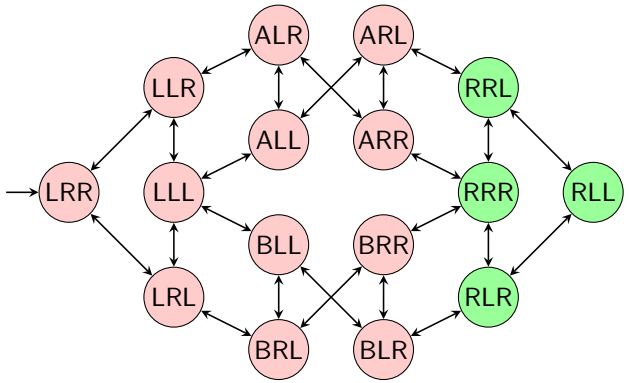

Abstraction: Example

(an) abstract state space

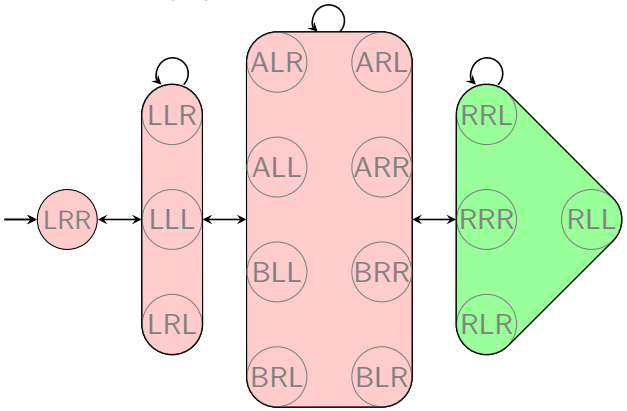

Remark: Most arcs correspond to several (parallel) transitions with different labels.

Abstraction Heuristic: Example

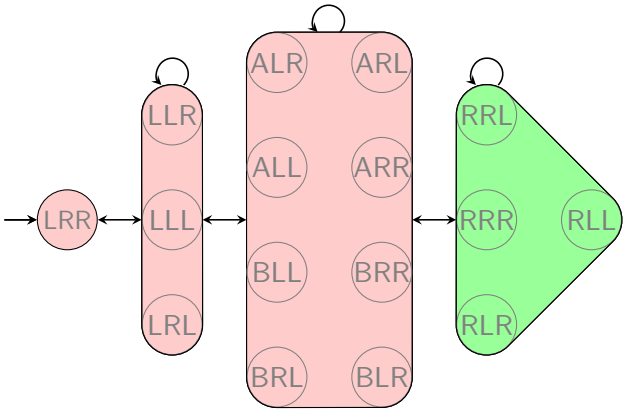

$h^\alpha(\{p \mapsto \mathrm{L}, t_\mathrm{A} \mapsto \mathrm{R}, t_\mathrm{B} \mapsto \mathrm{R}\}) = 3$

Abstraction Heuristics: Discussion

- Every abstraction heuristic is admissible and consistent. (proof idea?)
- The choice of the abstraction function α is very important.
  - Every α yields an admissible and consistent heuristic.
  - But most α lead to poor heuristics.
- An effective α must yield an informative heuristic ...
- ... as well as being efficiently computable.
- How to find a suitable α?

Automatic Computation of Suitable Abstractions

Main Problem with Abstraction Heuristics
How to find a good abstraction?

Several successful methods:

- pattern databases (PDBs) $\rightsquigarrow$ this course (Culberson & Schaeffer, 1996)
- merge-and-shrink abstractions (Dräger, Finkbeiner & Podelski, 2006)
- Cartesian abstractions (Seipp & Helmert, 2013)
- domain abstractions (Kreft et al., 2023)

German: Pattern Databases, Merge-and-Shrink-Abstraktionen, Kartesische Abstraktionen, Domänenabstraktionen

F6.2 Pattern Databases

Pattern Databases: Background

- The most common abstraction heuristics are pattern database heuristics.
- originally introduced for the 15-puzzle (Culberson & Schaeffer, 1996) and for Rubik's Cube (Korf, 1997)
- introduced for automated planning by Edelkamp (2001)
- for many search problems the best known heuristics
- many many research papers studying
  - theoretical properties
  - efficient implementation and application
  - pattern selection
  - ...

Pattern Databases: Projections

A PDB heuristic for a planning task is an abstraction heuristic where

- some aspects (= state variables) of the task are preserved with perfect precision while
- all other aspects are not preserved at all.

formalized as projections to a pattern $P \subseteq V$:

$$\pi_P(s) = \{v \mapsto s(v) \mid v \in P\}$$

example:

- $s = \{p \mapsto L, t_A \mapsto R, t_B \mapsto R\}$
- projection on $P = \{p\}$ (= ignore trucks): $\pi_P(s) = \{p \mapsto L\}$
- projection on $P = \{p, t_A\}$ (= ignore truck B): $\pi_P(s) = \{p \mapsto L, t_A \mapsto R\}$

German: Projektionen

Pattern Databases: Definition

Definition (pattern database heuristic)

Let P be a subset of the variables of a planning task.

The abstraction heuristic induced by the projection π_P on P is called pattern database heuristic (PDB heuristic) with pattern P.

abbreviated notation: h^P for h^{π_P}

German: Pattern-Database-Heuristik

remark:

- "pattern databases" in analogy to endgame databases (which have been successfully applied in 2-person-games)

Example: Concrete State Space

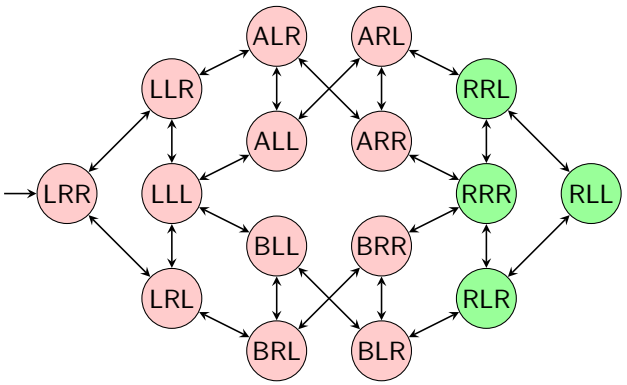

- state variable *package*: {L, R, A, B}
- state variable *truck A*: {L, R}
- state variable *truck B*: {L, R}

Example: Projection (1)

abstraction induced by $\pi_{\{package\}}$:

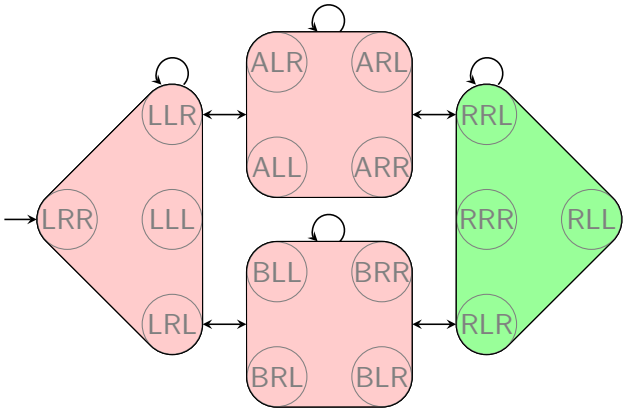

$h^{\{package\}}(\text{LRR}) = 2$

Example: Projection (2)

abstraction induced by $\pi_{\{package, truck\ A\}}$:

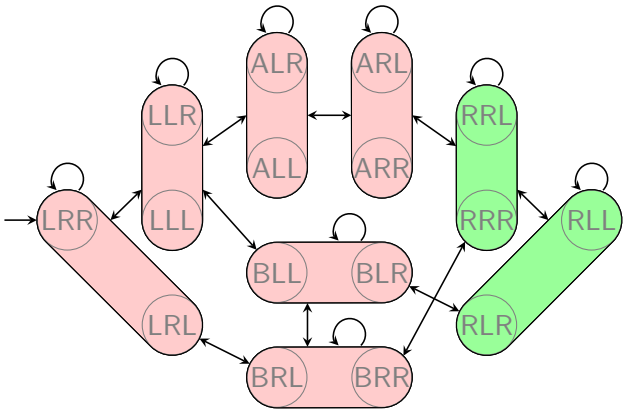

$h^{\{package, truck\ A\}}(\text{LRR}) = 2$

Pattern Databases in Practice

practical aspects which we do not discuss in detail:

- How to automatically find good patterns?
- How to combine multiple PDB heuristics?
- How to implement PDB heuristics efficiently?
  - good implementations efficiently handle abstract state spaces with 10^7, 10^8 or more abstract states
  - effort independent of the size of the concrete state space
  - usually all heuristic values are precomputed
    $\rightsquigarrow$ space complexity = number of abstract states

F6.3 Summary

Summary

- basic idea of abstraction heuristics: estimate solution cost by considering a smaller planning task.
- formally: abstraction function α maps states to abstract states and thus defines which states can be distinguished by the resulting heuristic.
- induces abstract state space whose solution costs are used as heuristic
- Pattern database heuristics are abstraction heuristics based on projections onto state variable subsets (patterns): states are distinguishable iff they differ on the pattern.